Features

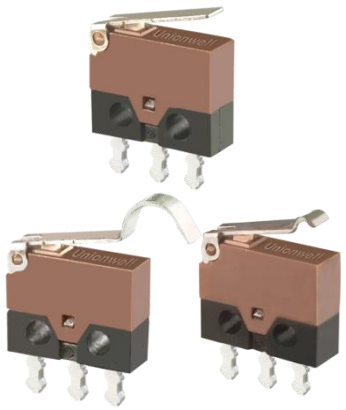

- Ultra-miniature, width-2.7mm, rating current load 0.1A~1A
- High precision spring plate construction to accomplish rapid switching, long life and excellent touch texture.
- Integrated moulding terminals structure preventing flux from not wicking.
- Multiple options of metal levers for use in the product structure design.
- Mechanical life exceeds 1 million cycles, higher life version available on request.
- Complied with ROSH requirements

Ordering Instruction

G15D(Metal Levers) Series Ultra-miniature Micro Switch:

G15D | Electrical Rating | Operating Force | Terminal Style | Lever Type | Base Color | Contact Material | Special Design Code

Code	Electrical Rating
P1	DC30V 0.1A
01	DC15V 1A

Code	Operating Force at pin Plunger
60	60gf white base, no lever
110	110gf black base, no lever
30	30gf black base, with lever
15	15gf white base, with lever

Code	Terminal Style	Graph
P	Standard PCB Terminals	
D	Long PCB Terminals	
L	Left Side PCB Terminals	
R	Right Side PCB Terminals	

Code	Lever Type
00	
01	
02	
03	
04	
06	

Code	Base Color	Electrical Life	Mechanical Life
B	Black	20,000 cycles	20,000 cycles
W	White	20,000 cycles	300,000 cycles

Code	Contact Material
Ag	Silver Alloy
Au	Gold Plated

Code	Special Designator
T	Here means a special designator letter, Refer to products specification differences

Model No.

Electrical Rating / Terminal Style / Lever Type	0.1A Standard PCB Terminals	0.1A Left Side PCB Terminals	0.1A Right Side PCB Terminals	0.1A Long PCB Terminals	1A Standard PCB Terminals	1A Left Side PCB Terminals	1A Right Side PCB Terminals	1A Long PCB Terminals
	G15DP1-**P00	G15DP1-**L00	G15DP1-**R00	G15DP1-**D00	G15D01-**P00	G15D01-**L00	G15D01-**R00	G15D01-**D00
	G15DP1-**P01	G15DP1-**L01	G15DP1-**R01	G15DP1-**D01	G15D01-**P01	G15D01-**L01	G15D01-**R01	G15D01-**D01
	G15DP1-**P02	G15DP1-**L02	G15DP1-**R02	G15DP1-**D02	G15D01-**P02	G15D01-**L02	G15D01-**R02	G15D01-**D02
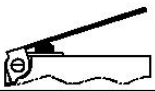	G15DP1-**P03	G15DP1-**L03	G15DP1-**R03	G15DP1-**D03	G15D01-**P03	G15D01-**L03	G15D01-**R03	G15D01-**D03
	G15DP1-**P04	G15DP1-**L04	G15DP1-**R04	G15DP1-**D04	G15D01-**P04	G15D01-**L04	G15D01-**R04	G15D01-**D04
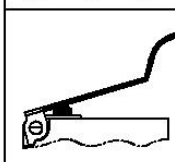	G15DP1-**P06	G15DP1-**L06	G15DP1-**R06	G15DP1-**D06	G15D01-**P06	G15D01-**L06	G15D01-**R06	G15D01-**D06

Circuit

SPDT

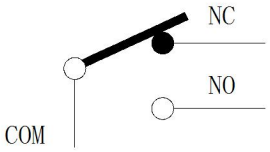

Contacts Specification

Item	Model	1A Series	0.1A Series
Contact	Specification	Contact	
	Material	Gold Plated	Silver Alloy
	Space	0.35mm	
Min Electrical Rating (Reference Value)		DC5V 5mA	DC5V 50mA

Rating

Model No.	1A Series	0.1A Series
Load Type	Resistive Load	
Electrical Rating	DC15V 1A	DC30V 0.1A

Note: The above rating value under the test of following setting parameters

(1) Storage Temperature: 20±2°C
(2) Storage Humidity : 65±5%RH
(3) Operating Frequency:20 cycles/min

Parameters

Series No.	G15DP1		G15D01	Customized
Operating Force	15gf 30gf 60gf 110gf			
Contacts	Silver Alloy	Gold Plated		
Electrical Rating	0.1A DC30V		1A DC15V	0.1A DC30V
Contact Resistance(Initial value)	100mΩ Max			
Operating Frequency	Mechanical: 60 cycles max Electrical: 20 cycles max			
Insulation Resistance	100MΩ Min（DC 500V)			
Voltage Resistance	AC250V 50/60Hz 1min			
Mechanical Life	20,000 cycles	300,000 cycles	300,000 cycles	1,000,000 cycles
Electrical Life	20,000 cycles	300,000 cycles	10,000 cycles	1,000,000 cycles
Storage Humidity	85% RH max at +40°C			
Operating Temperature Range	—40～+85°C			
Solder Ability	255±5°C 5s			
Protection Type	IP40			
Unit Net Weight	Approx 0.3g			
Note: Mechanical life test under 150gf operating force				

Switch Terminals Types（Unit: mm）

Standard PCB Terminals(Type P)

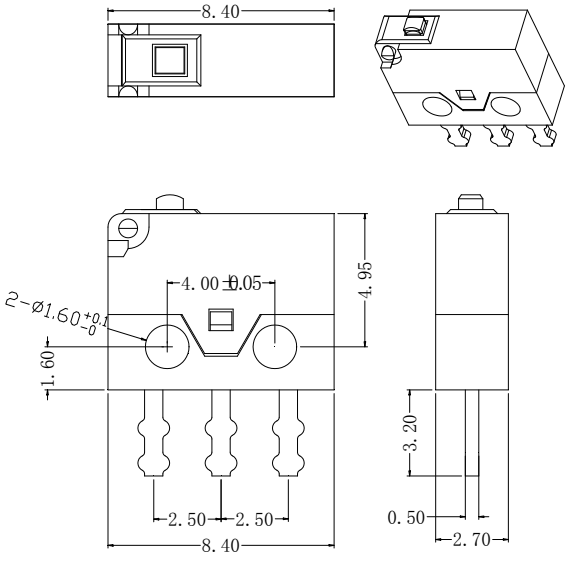

Long PCB Terminals(Type D)

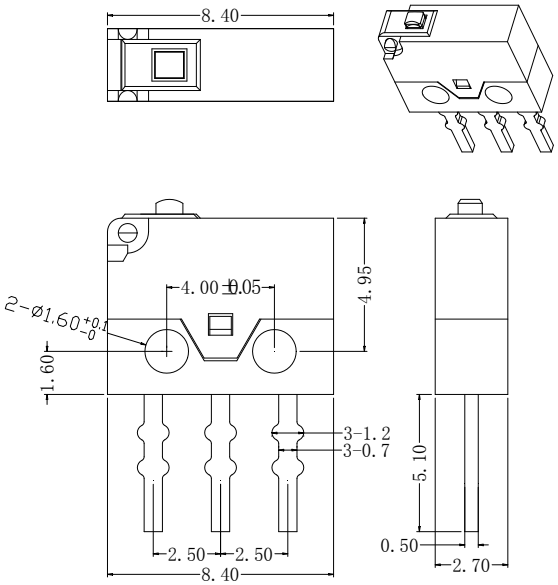

● Left Side PCB Terminals(Type L)

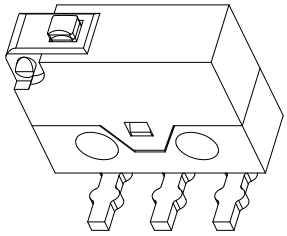

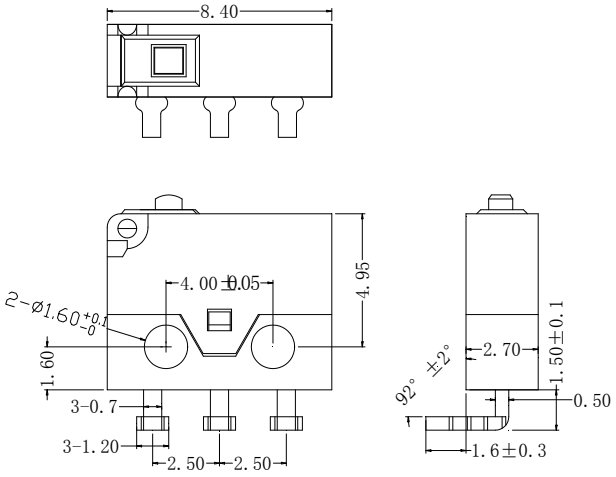

● Right Side PCB Terminals(Type R)

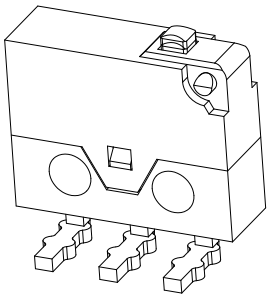

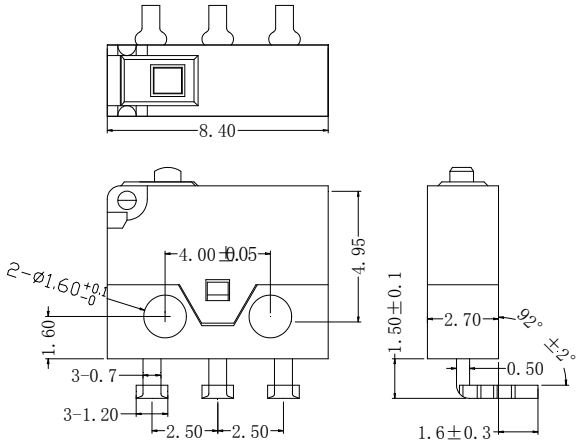

■ Mounting Holes Dimensions (mm)

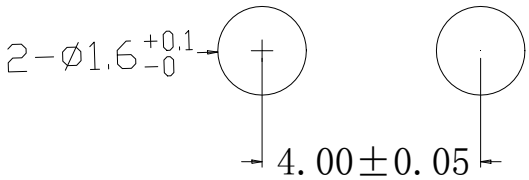

Dimensions (mm) And Operating Parameters

No Lever Pin Plunger Series

(Dimensions with Optional Curved/Long Terminals)

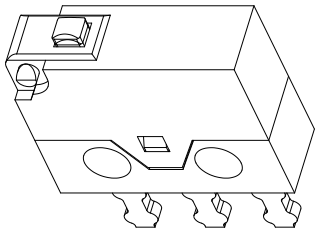

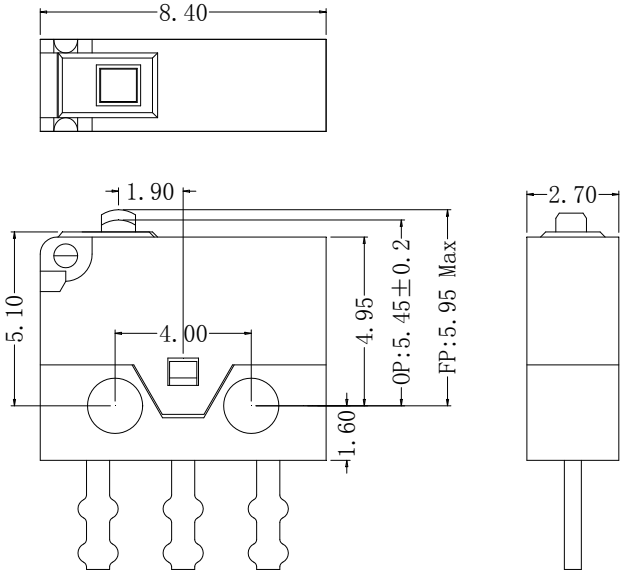

Operating Force (OF)	60gf 110gf
Release Force(RF)	15gf Min
Pre-travel(PT)	0.3 Max
Over-travel(OT)	0.35 Max
Movement-Differential(MD)	0.2 Max
Free Position(FP)	5.95 Max
Operating Position(OP)	5.45±0.2
Mechanical Life	50,000 cycles 300,000 cycles 1,000,000 cycles
Mechanical Life	1A 10,000 cycles
	0.5A 20,000 cycles
	0.1A 50,000 cycles
	0.1A 300,000 cycles
	0.1A 1,000,000 cycles

Hinge Lever Series

(Dimensions with Optional Curved/Long Terminals, Mounting Posts)

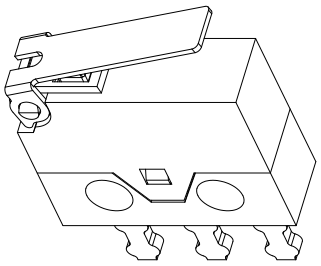

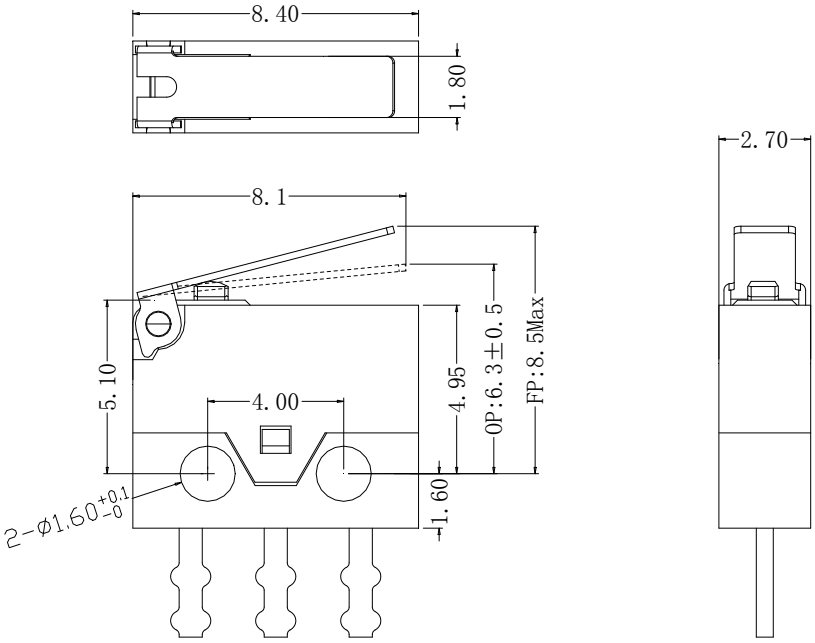

Operating Force (OF)	50gf max
Release Force(RF)	5gf Min
Pre-travel(PT)	1.1Max
Over-travel(OT)	0.9 Max
Movement-Differential(MD)	0.3 Max
Free Position(FP)	8.5 Max
Operating Position(OP)	6.3±0.5
Mechanical Life	50,000 cycles 300,000 cycles 1,000,000 cycles
Mechanical Life	1A 10,000 cycles
	0.5A 20,000 cycles
	0.1A 50,000 cycles
	0.1A 300,000 cycles
	0.1A 1,000,000 cycles

● Simulated Roller R0.7 Series

(Dimensions with Optional Curved/Long Terminals, Mounting Posts)

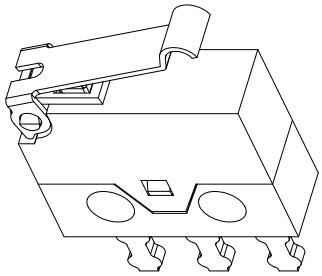

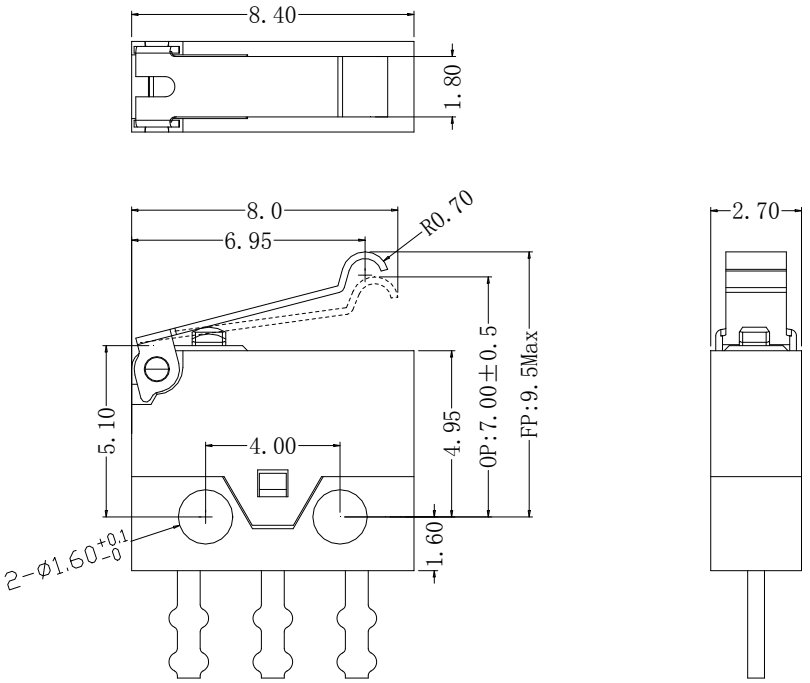

Operating Force (OF)	50gf max
Release Force(RF)	5gf Min
Pre-travel(PT)	1.1 Max
Over-travel(OT)	1.0 Max
Movement-Differential(MD)	0.4 Max
Free Position(FP)	9.5 Max
Operating Position(OP)	7.0±0.5
Mechanical Life	50,000 cycles 300,000 cycles 1,000,000 cycles
Mechanical Life	1A 10,000 cycles
	0.5A 20,000 cycles
	0.1A 50,000 cycles
	0.1A 300,000 cycles
	0.1A 1,000,000 cycles

● Simulated Roller R2.0 Series

(Dimensions with Optional Curved/Long Terminals, Mounting Posts)

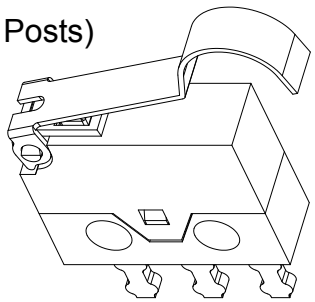

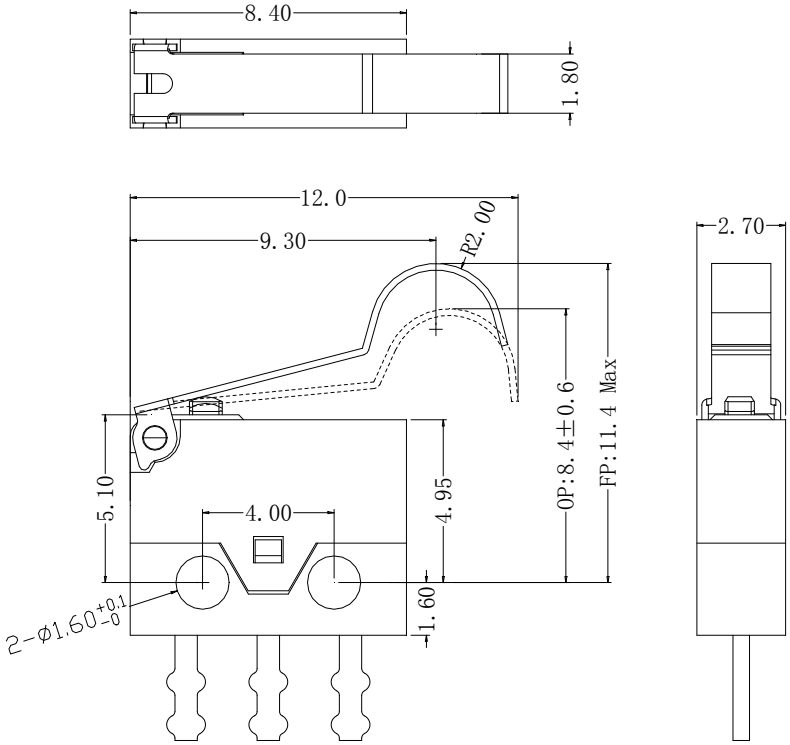

Operating Force (OF)	50gf max
Release Force(RF)	5gf Min
Pre-travel(PT)	1.6 Max
Over-travel(OT)	1.0 Max
Movement-Differential(MD)	0.5 Max
Free Position(FP)	11.4 Max
Operating Position(OP)	8.4±0.6
Mechanical Life	50,000 cycles 300,000 cycles 1,000,000 cycles
Mechanical Life	1A 10,000 cycles
	0.5A 20,000 cycles
	0.1A 50,000 cycles
	0.1A 300,000 cycles
	0.1A 1,000,000 cycles